MODEL SELECTION

MODEL	MAX OP (WATTS)	DC INPUT (V)	DC INPUT RATING (A) +5V	+ 12V	+24V	ORDER INFORMATION	FIG.
TSD-25 □—□□	25	12,24,48	5	2.1	1.1		A
TSD-50 □—□□	50	12,24,48	10	4.2	2.1		C
TSD-100 □—□□	100	24,48,96	20	8.5	4.2		D
TSD-150 □—□□	150	24,48,96		12.5	6.3		E

TSD-50□—□□

INPUT VOLTAGE: A:9-18VDC; B: 19-36VDC; C: 36-72VDC; D:72-144VDC

OUTPUT VOLTAGE: 05:4.5-6.5V; 12:11-6V; 24:23-30V

MECHANICAL OUTLINE

FIG.A

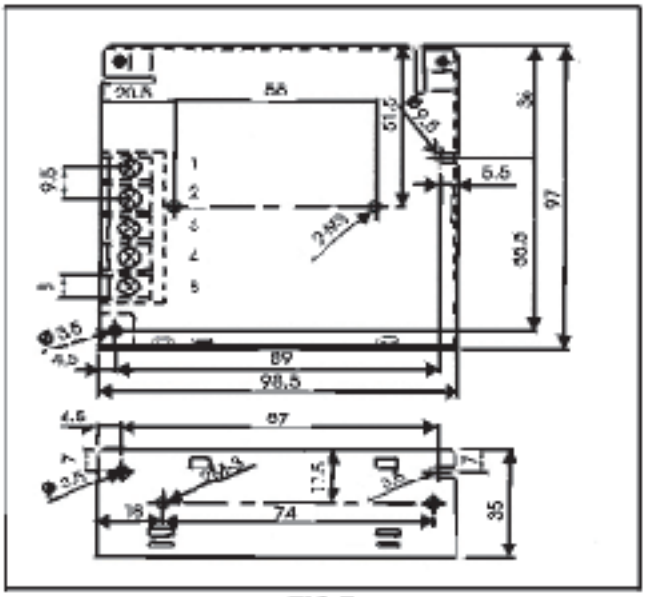

FIG.C

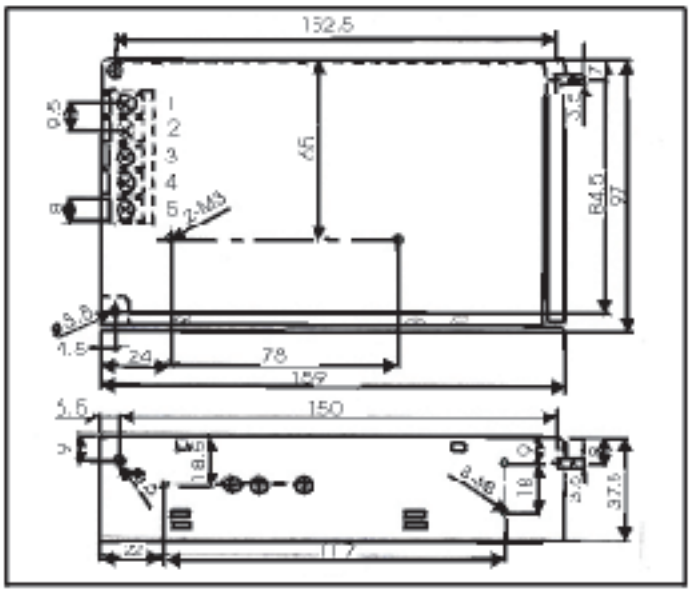

FIG.D

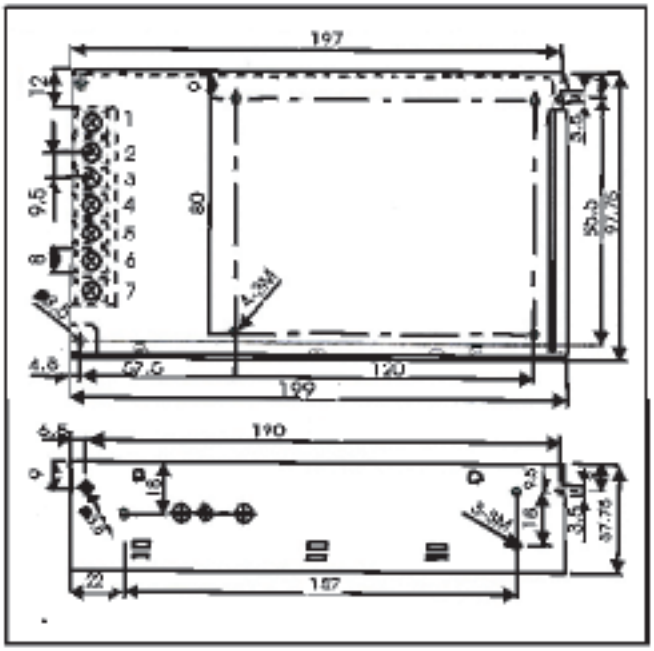
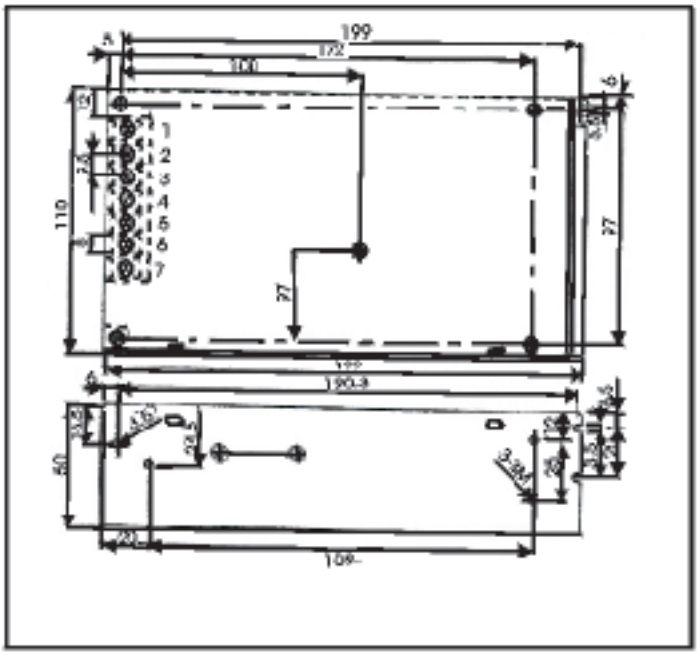
FIG.E